JIB CRANES

TABLE OF CONTENTS

Why a Jib Crane	2
How To Choose The Right Crane	2
Free Standing Jib Cranes	3
100 Series	4
101 Series	4
102 Series	5
Mast Jib Cranes	
200 Series	6
201 Series	6
Wall Mounted Jib Cranes	
300 Series	7
301 Series	8
Enclosed Track Workstation Jib Cranes	
Free Standing	9
Wall Mounted	10
Special Jib Crane Designs	
Wall Traveling Jib Cranes	11
Articulating Jib Cranes	12
Retrofit Drives	13
Control Panel	13
Motorized Jib and Drive Systems	14

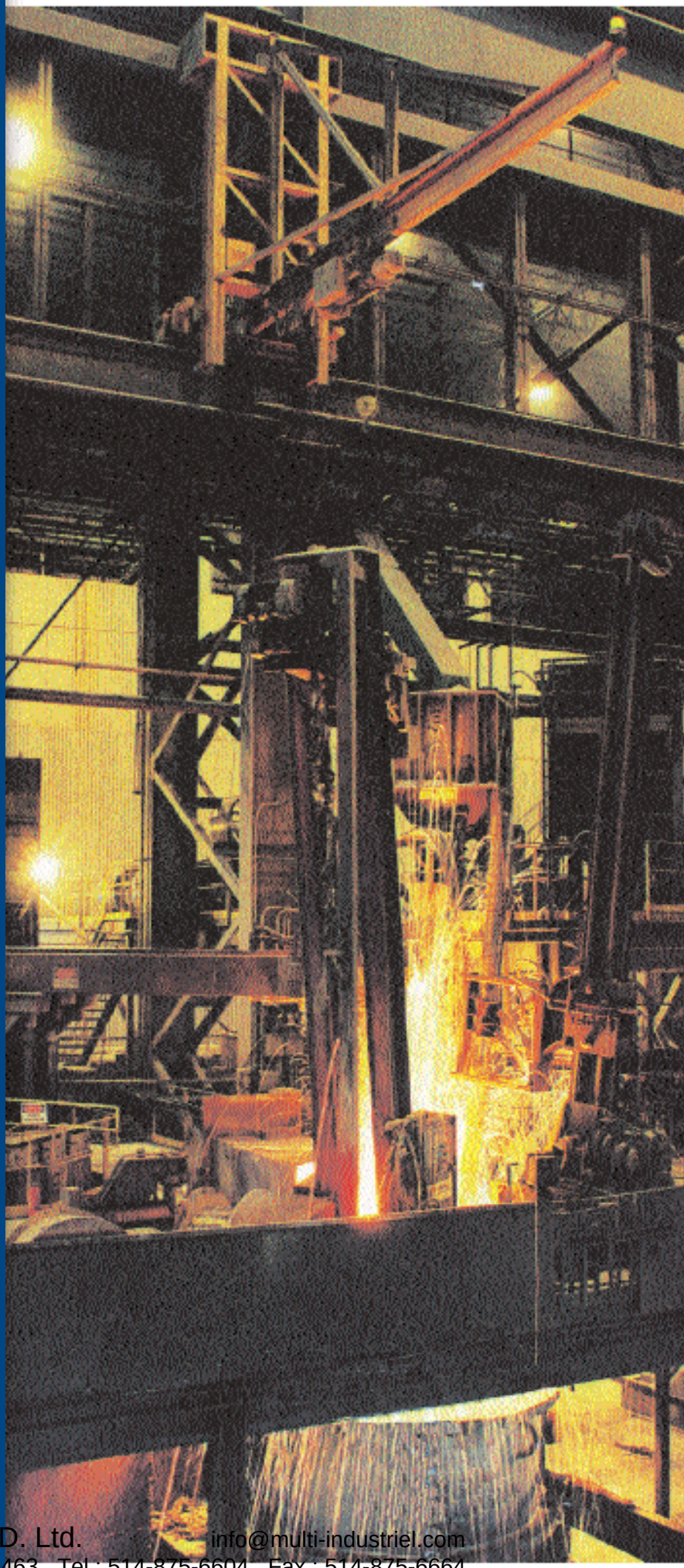

Multi-Industriel A.D. Ltd.
Toll-free : 1-800-363-4463 Tel : 514-875-6604 Fax : 514-875-6664
info@multi-industriel.com

WHY A JIB CRANE?

Today's industry demands versatile, efficient, and cost effective equipment while at the same time providing more flexibility along with significant savings through increased productivity. A jib crane can help improve materials handling efficiency and work flow. Serious consideration should be given to jib cranes for applications requiring repetitive lifting and transferring of loads within a fixed arc of rotation.

HOW TO CHOOSE THE RIGHT CRANE

In selecting a jib crane to match your individual requirements and application, thought should be given to operation type, available structure, necessary options, and cost of both the unit and installation. The following factors should be considered in order to choose a jib crane for maximum effectiveness at minimum cost.

- **Capacity:** The maximum weight of the application should match, NOT exceed, design weight. The capacity rating is based on a design load which includes the capacity rating of the crane plus 15% of the capacity for the weight of the hoist and trolley, 25% of the capacity as an allowance for impact. The deflection is based on a design load which includes capacity plus 15% of capacity for the hoist and trolley. The SPANCO design criteria allows the least amount of deflection so as not to hamper the performance of the crane.
- **Area of rotation:** Free standing and mast type jib cranes offer 360° rotation. Wall mounted types offer 200° rotation.
- **Underboom height:** Distance from the floor to the underside of the boom. The size of the hoist and the amount of lifting distance should also be considered.
- **Overall height:** The height to the highest point on the crane after installation. Any attachments, such as electrical entry, should also be considered to provide full rotational potential of the crane, and to be free of overhead obstructions.
- **Working span:** Amount of actual working area needed. The working distance or hook distance is approximately one-half the trolley length from the end of the beam, and also is the same distance from the head assembly or vertical support member of the jib.
- **Power-motor requirement:** How much power is necessary? Is the power for rotation, trolley, hoist, or all three? (standard powered jib rotation is approximately 1/2 r.p.m) How will the power be supplied? Bottom or top entry? Electric or air? Finally, does the system need to be weatherized or is it for indoor use?
- **Installation:** Can the crane be assembled easily to reduce cost? The location will also dictate the type of crane to be selected to insure proper installation. Free standing jibs require reinforced concrete foundations which can cost more than the crane itself.

WARNING: This equipment is not, in any way, designed for lifting, supporting, or transporting humans. Failure to follow the specified load and mounting limitations can result in serious bodily injury and/or property damage.

Jib cranes are an economical solution for moving materials within an individual workstation, for transferring materials from work area to work area or for serving as auxiliary lifting devices under overhead cranes. Styles range from entirely self-supporting to styles that mount to existing building columns, resulting in low costs compared to some overhead lifting systems. Because they are self-supporting, free standing jib cranes are well suited for outdoor use and can be fully weatherized.

FREE STANDING JIB CRANES

Free standing jib cranes are available in three basic styles to suit specific applications: base plate mounted, foundation mounted, and sleeve insert mounted.

360° rotational capability can maximize the utilization of any work area.

No additional support is needed other than the specified reinforced concrete foundation.

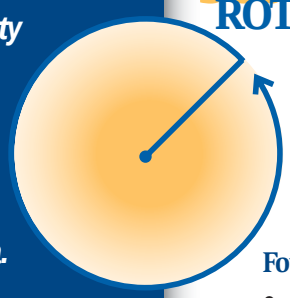

360° ROTATION

FREE STANDING JIB CRANES

- 360° rotation.
- Allows for electrified, motor driven, powered rotation through various collector ring assemblies.
- The boom or I-beam is designed to meet all specifications utilizing a 25% factor of rated load for impact and 15% of rated load for hoist and trolley weight.
- The pipe mast or column is designed to give maximum strength and minimum deflection to resist bending, buckling, and crushing as well as wear by the trunnion roller assembly.
- The top bearing assembly utilizes a Timken tapered roller bearing provided with a grease fitting for proper lubrication.
- The bearings are designed for a 5000 hour, B-10 design life.

Head assembly

- Constructed of standard plate, angles, and channels to ensure minimum deflection and maximum rigidity.
- The plates are reinforced using angles to limit compression and buckling stresses.
- The lower trunnion roller assembly is mounted on a channel which transfers the load from the top of the box.
- The head assembly is designed to inhibit dislodgment due to upward and forward motion. It allows bottom entry electrification inside the head and will also allow mounting above the boom for top entry electrification.

Foundations

- SPANCO free standing jib cranes are designed to be mounted to a permanent concrete foundation which, in addition to anchoring the crane, acts basically as a counterweight for the forces exerted by the crane under maximum loading conditions. The recommended foundations are based on a soil pressure of 2,500 lbs. per sq. ft., so it is possible in some cases to reduce the foundation size if it is determined to be feasible by a qualified architect or engineer.

- It is solely the customer's responsibility to provide the proper foundation for the crane so there should be no deviation from the recommended foundation size without first consulting a qualified professional.

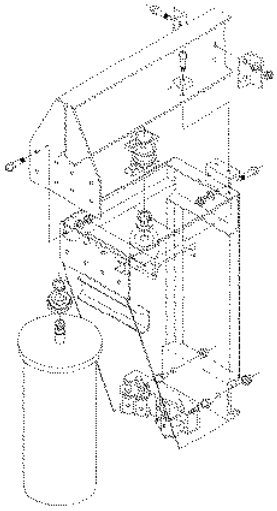

Multi-Industriel A.D. Ltd. info@multi-industriel.com
Toll-free : 1-800-363-4463 Tel : 514-875-6604 Fax : 514-875-6664

100 SERIES

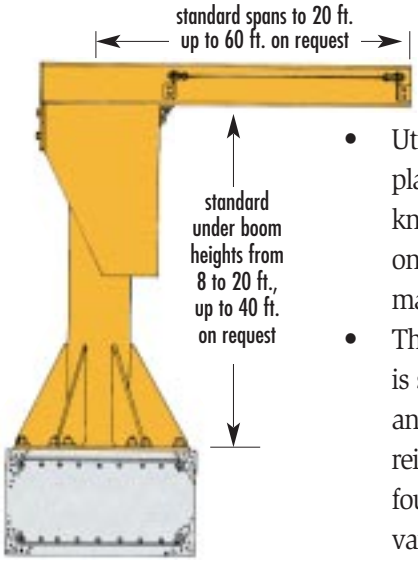

standard capacities to 5 tons,
special capacities to 15 tons

Base Plate Mounted

- Utilizes a hexagonal base plate reinforced with six knee braces equally spaced on the circumference of the mast.
- The base plate assembly is secured by means of anchor bolts to a prescribed reinforced concrete foundation, with the number of anchor bolts varying with the capacity of the crane.
- Six bolts are used for columns less than 16" in diameter and 12 bolts for columns 16" in diameter and greater.

101 SERIES

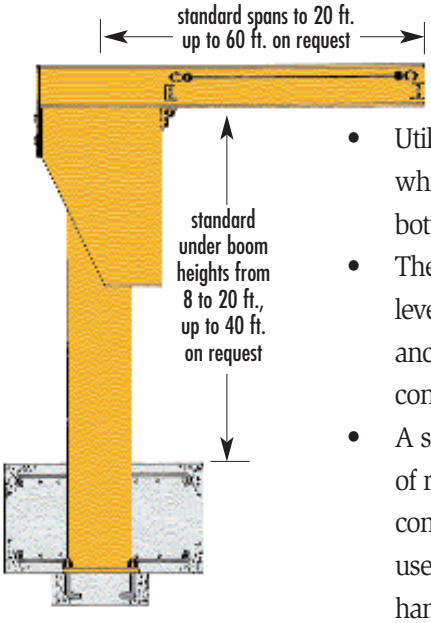

standard capacities to 5 tons,
special capacities to 15 tons

Foundation Mounted

- Utilizes a square steel plate which is welded to the bottom of the column.
- The plate positions and levels the mast by anchoring it to a first-pour concrete footing.
- A second-pour foundation of reinforced concrete supports the mast. Makes complete use of the work floor area and can be used in applications where a base plate could hamper floor activity.

Multi-Industriel A.D. Ltd.
info@multi-industriel.com
Toll-free : 1-800-363-4463 Tel : 514-875-6604 Fax : 514-875-6664

FREE STANDING JIB CRANES

Cost-effective Solutions For Lifting and Moving Heavy Material

FREE STANDING SERIES JIB CRANE

CAPACITY TONS	SPAN	HEIGHT UNDER BOOM	MAST	BOOM	OVERALL HEIGHT	BOLT CIRCLE DIAMETER
1/2	10'	10'	12"	8"	10'-8"	30"
	12'	10'	12"	8"	10'-8"	30"
	14'	10'	12"	10"	10'-10"	30"
	16'	10'	12"	10"	10'-10"	30"
	18	10'	12"	12"	11'-0"	30"
	20'	10'	14"	12"	11'-0"	36"
1	10'	10'	12"	10"	10'-10"	30"
	12'	10'	14"	10"	10'-10"	36"
	14'	10'	14"	12"	11'-0"	36"
	16'	10'	14"	12"	11'-0"	36"
	18	10'	14"	15"	11'-3"	36"
	20'	10'	16"	15"	11'-3"	42"
2	10'	12'	14"	12"	13'-0"	36"
	12'	12'	16"	12"	13'-0"	42"
	14'	12'	16"	15"	13'-3"	42"
	16'	12'	16"	18"	13'-6"	42"
	18	12'	16"x	18"	13'-6"	42"
	20'	12'	18"	18"	13'-6"	48"
3	10'	12'	16"	15"	13'-3"	42"
	12'	12'	16"x	15"	13'-3"	42"
	14'	12'	16"x	18"	13'-6"	42"
	16'	12'	18"	20R	14'-6"	48"
	18	12'	18"	20R	14'-6"	48"
	20'	12'	24"	24R	14'-6"	60"
5	10'	12'	18"	18"	13'-8"	48"
	12'	12'	20"	18"	13'-8"	54"
	14'	12'	20"	20R	14'-6"	54"
	16'	12'	24"	24R	14'-6"	60"
	18	12'	24"	24R	14'-6"	60"
	20'	12'	24"	25R	15'-0"	60"

102 SERIES

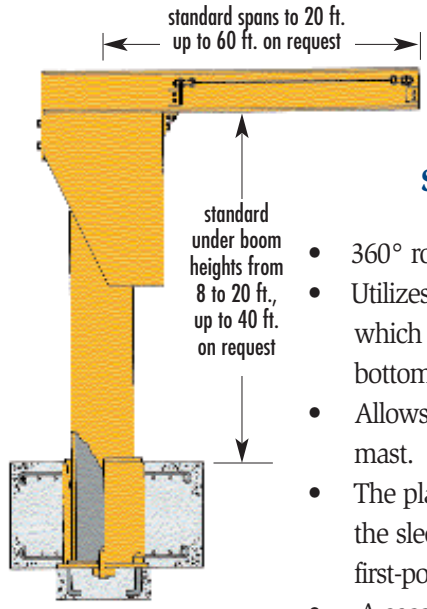

standard capacities to 5 tons, special capacities to 15 tons

Sleeve Insert Mounted

- 360° rotation.
- Utilizes a square steel plate which is welded to the bottom of the sleeve.
- Allows for relocation of the mast.
- The plate positions and levels the sleeve by anchoring it to a first-pour concrete footing.
- A second-pour foundation of reinforced concrete supports the sleeve.
- The mast is then placed into the sleeve where it is leveled by wedges and welded in place. 102 series can be relocated without damaging the mast.*
- Makes complete use of the work floor area and can be used in applications where a base plate could hamper floor activity.

360° ROTATION

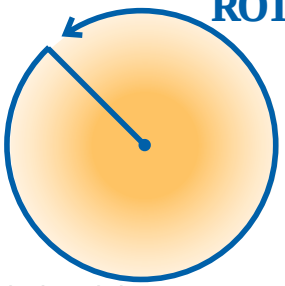

**New sleeve and foundation would be required.*

Multi-Industriel A.D. Ltd. info@multi-industriel.com
Toll-free : 1-800-363-4463 Tel : 514-875-6604 Fax : 514-875-6664

MAST JIB CRANES

MAST JIB CRANES

free standing jib cranes.

- Full 360° rotation, without requiring a large mounting foundation (which can cost more than the crane).
- Requires top and bottom support of the mast to building floor and overhead building steel.
- Power rotation is available on all models.

WARNING:
Jib cranes should not be hung from any existing building structure without first consulting a qualified architect or engineer for the purpose of determining if the structure is adequate. Severe bodily injury and property damage can result if this procedure is not followed.

200 SERIES

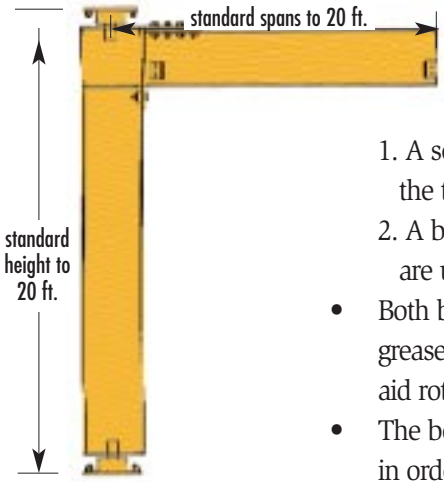

standard capacities to 5 tons
Greater spans, heights, and capacities on request

Full Cantilever

- Utilizes an I-beam for the boom and an H-beam for the column.
- Two types of bearing arrangements:
  1. A self-aligning spherical bearing is used on the top bearing assembly.
  2. A bronze bearing and bronze thrust washer are used on the bottom assembly.
- Both bearing assemblies are provided with grease fittings to provide lubrication and to aid rotation.
- The boom is mounted at the top of the mast in order to provide maximum underboom clearance.

201 SERIES

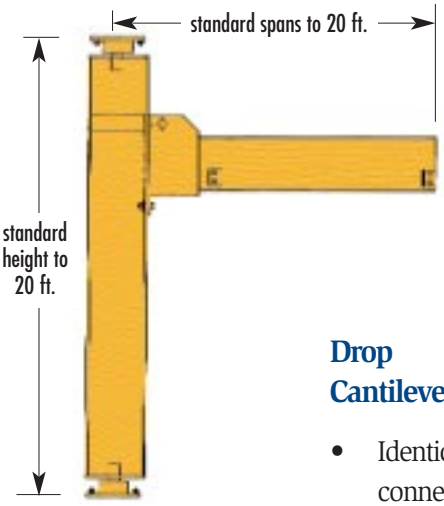

standard capacities to 5 tons
Greater spans, heights, and capacities on request

Drop Cantilever

- Identical to the Series 200 with the addition of side-plate connections which allow the boom to be mounted permanently at any specified height on the mast.
- Provides clearance for overhead obstructions above the boom, below the top of the mast.

MAST SERIES JIB CRANE

CAPACITY TONS	SPAN	OVERALL HEIGHT	MAST	BOOM
1/2	10'	10'-0"	10"	8"
	16'	10'-0"	14"	10"
	20'	10'-0"	14"	12"
1	10'	10'-0"	14"	10"
	16'	10'-0"	14"	12"
	20'	10'-0"	16"	15"
2	10'	12'-0"	14"	12"
	16'	12'-0"	18"	18"
	20'	12'-0"	21"	20R
3	10'	12'-0"	16"	15"
	16'	12'-0"	21"	20R
	20'	12'-0"	21"	24R
5	10'	14'-0"	18"	18"
	16'	14'-0"	24"	24R
	20'	14'-0"	27"	24R

Multi-Industriel A.D. Ltd. info@multi-industriel.com
Toll-free : 1-800-363-4463 Tel : 514-875-6604 Fax : 514-875-6664

WALLMOUNTED JIB CRANES

Cost-effective Solutions For Lifting and Moving Heavy Material

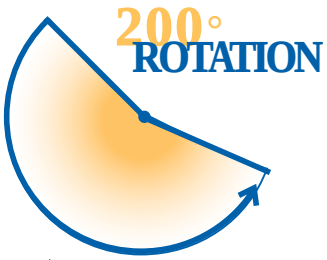

300 SERIES

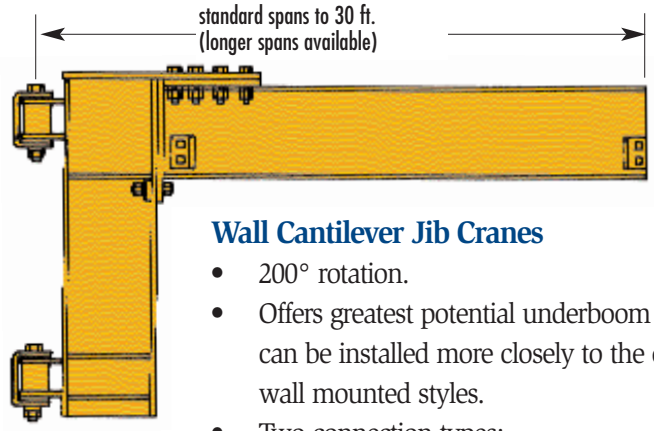

standard capacities to 5 tons, higher capacities available

Wall Cantilever Jib Cranes

- 200° rotation.
- Offers greatest potential underboom clearance because it can be installed more closely to the ceiling than other wall mounted styles.
- Two connection types:
  1. A welded connection is used in most capacity and boom spans.
  2. A bolted connection is used for larger spans and capacities because of shipping considerations. Stiffeners are welded to the mast at the point where the wall brackets are connected to stiffen the web of the I-beam.
- Powered rotation is available on all models.
- Hardware for mounting to wall or column supplied by others.

WALL CANTILEVER SERIES JIB CRANE

CAPACITY TONS	SPAN	SUPPORT BRACKET CENTERS	BEAM	SUPPORT TO PIVOT POINT
1/2	10'	4'-0"	8"	3 1/2"
	16'	4'-0"	10"	3 1/2"
	20'	4'-0"	12"	3 1/2"
1	10'	5'-0"	10"	3 1/2"
	16'	6'-0"	12"	3 1/2"
	20'	6'-0"	15"	3 1/2"
2	10'	4'-0"	12"	4"
	16'	6'-0"	18"	4"
	20'	6'-6"	20R	4"
3	10'	4'-0"	15"	4"
	16'	6'-6"	18"	4"
	20'	9'-6"	24R	4"
5	10'	6'-6"	18"	6"
	16'	9'-6"	24R	6"
	20'	9'-6"	25R	6"

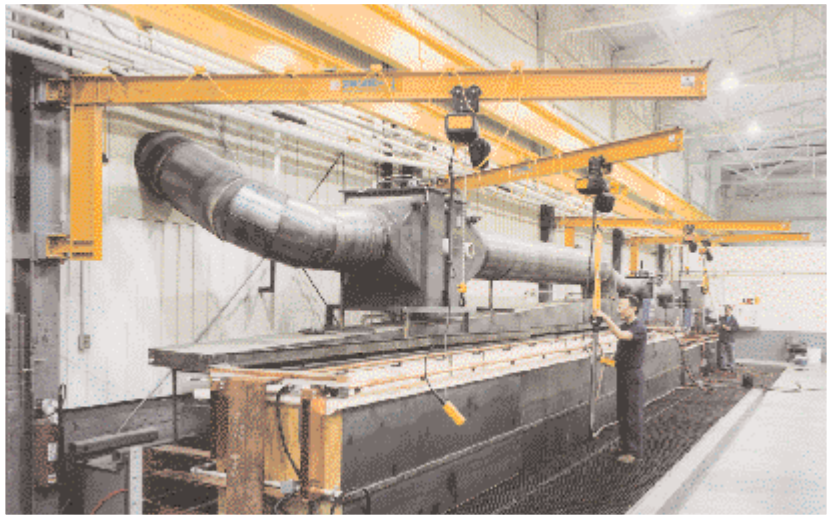

Wall Cantilever Kits *(shown left)*

Customers can fabricate their own Wall Cantilever Jib Crane using the hinge components supplied by SPANCO. All hardware for bolting the hinges to the jib are supplied.

Multi-Industriel A.D. Ltd. info@multi-industriel.com
Toll-free : 1-800-363-4463 Tel : 514-875-6604 Fax : 514-875-6664

WARNINGS FOR 300 AND 301 SERIES JIBS

This equipment is not, in any way, designed for the lifting, supporting, or transporting humans. Failure to follow the specified load and mounting limitations can result in serious bodily injury and/or property damage.

Jib cranes should not be hung from any existing building structure without first consulting a qualified architect or engineer for the purpose of determining if the structure is adequate. Severe bodily injury and property damage can result if this procedure is not followed.

301 SERIES

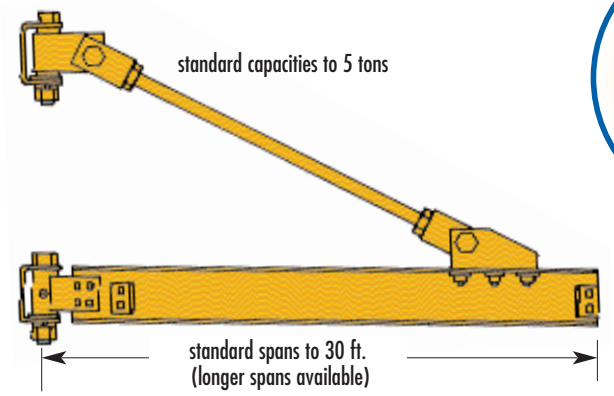

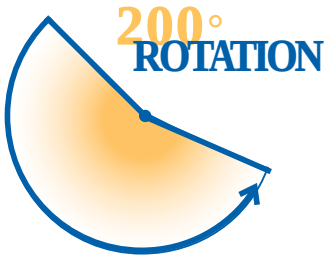

WALL BRACKET KITS
Include all components except the I-beam, tie rod, and mounting hardware which if preferred, can be purchased locally.

Wall Bracket Tie Rod Supported Jib Cranes

- 200° degree rotation.
- Utilizes a standard I-beam boom, a tie rod threaded at both ends, a fabricated beam bracket, and two wall brackets; one for the tie rod and one for the boom.
- Allows maximum usage of the work area, including work close to the existing structure, because there are no supporting components under the boom.
- This design is the most economical style of jib crane, provided overhead clearance or building column strength is not a limiting factor.
- Hardware for mounting to wall or column supplied by others.

WALL BRACKET SERIES JIB CRANE

CAPACITY TONS	SPAN	BRACKET CENTERS	SUPPORT BEAM BRACKET TO BEAM END	BEAM	SUPPORT TO PIVOT	TIE ROD DIAMETER
1/2	10'	3'-0"	1'-6"	6"	3 1/2"	1" DIA.
	16'	5'-6"	2'-0"	6"	3 1/2"	1" DIA.
	20'	6'-6"	2'-3"	10"	3 1/2"	1" DIA.
1	10'	3'-0"	1'-6"	6"	3 1/2"	1" DIA.
	16'	5'-6"	2'-3"	8"	3 1/2"	1" DIA.
	20'	6'-6"	2'-6"	10"	3 1/2"	1" DIA.
2	10'	3'-0"	1'-6"	8"	4"	1 1/2" DIA.
	16'	5'-6"	2'-3"	10"	4"	1 1/2" DIA.
	20'	6'-6"	2'-6"	12"	4"	1 1/2" DIA.
3	10'	3'-3"	1'-6"	8"	4"	1 1/2" DIA.
	16'	5'-6"	2'-3"	10"	4"	1 1/2" DIA.
	20'	7'-0"	2'-6"	12"	4"	1 1/2" DIA.
5	10'	3'-3"	1'-6"	12"	6"	2" DIA.
	16'	5'-6"	2'-6"	15"	6"	2" DIA.
	20'	7'-0"	3'-6"	15"*	6"	2" DIA.

Wall Bracket Connection

- Top and bottom wall brackets utilize a formed steel channel, with two bronze bushings, bronze thrust washers, and formed tie rod clevises.
- All bolted connections are in double shear.
- All swivel connections utilize bronze bushings and grease fittings to ease rotation, promoting long life and low maintenance.

Multi-Industriel A.D. Ltd. info@multi-industriel.com
Toll-free : 1-800-363-4463 Tel : 514-875-6604 Fax : 514-875-6664

FREE STANDING WORKSTATION JIB CRANES

Cost-effective Solutions For Lifting and Moving Heavy Material

ENCLOSED TRACK WORKSTATION JIB CRANES

FREESTANDING

- SPANCO can custom design and manufacture jib cranes for any application.
- SPANCO freestanding 360° rotation workstation jib cranes are an ideal, lightweight ergonomic solution for smaller capacity loads up to 1,000 lbs., spans to 16 ft. Lightweight boom design makes the jib easier to rotate and position.

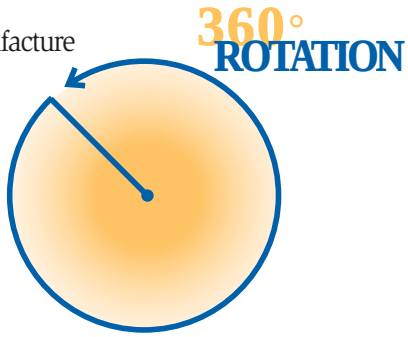

Counterweight Bases

Portable counterweight bases are available for freestanding workstation jibs, which allows the jib to be moved by fork lift anywhere in the facility.

- Available in capacities to 500 lbs. and spans to 16 ft., depending on combination of span and capacity.
- Portable cranes eliminate the need for unnecessary hoisting equipment. One unit can service multiple areas.
- See form # MTJ-301

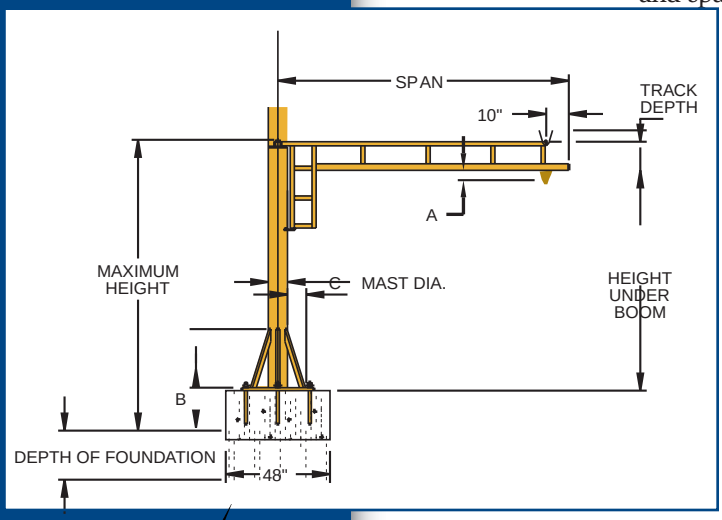

Multi-Industriel A.D. Ltd. info@multi-industriel.com
Toll-free : 1-800-363-4463 Tel : 514-875-6604 Fax : 514-875-6664

WALL MOUNTED WORKSTATION JIB CRANES

WALL MOUNTED

- SPANCO's wall mounted 200° rotation enclosed track workstation jib cranes can be tie rod supported for the lowest cost or compression braced for maximum head room.
- Tie rod supported models can be fabricated with trussed track for spans up to 34 ft.

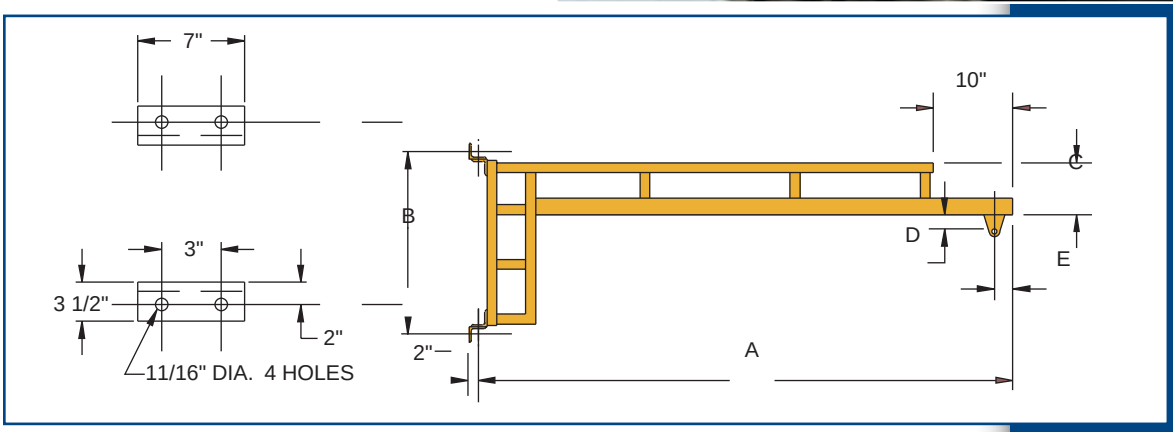

WARNING:

Jib cranes should not be hung from any existing building structure without first consulting a qualified architect or engineer for the purpose of determining if the structure is adequate. Severe bodily injury and property damage can result if this procedure is not followed.

Multi-Industriel A.D. Ltd. info@multi-industriel.com
Toll-free : 1-800-363-4463 Tel : 514-875-6604 Fax : 514-875-6664

WALL TRAVELING JIB CRANES

Cost-effective Solutions For Lifting and Moving Heavy Material

SPECIAL JIB CRANE DESIGNS

WALL TRAVELING JIB CRANES

- Wall traveling jib cranes are custom engineered as a perfect complement to an overhead crane system to perform tasks efficiently without tying up an overhead crane, also they can be used to cover a series of workstations with little or no downtime waiting for an overhead crane.
- Wall traveling jib crane end trucks use channel beam construction frames to resist twisting and are jig-fixtured and machined to maintain consistent manufacturing tolerances. Bolt type connection to back frame for ease of erection and assembly. Top running end trucks utilize forged steel double flange crane wheels for long life.
- Crane drive utilizes squirrel cage motor with double reduction spur gear reducer.
- Standard single speed controls include mainline contactor, control transformer, inverter acceleration control and fuses in NEMA 3R, 4, 12 control enclosures.
- Multi-speed units are equipped with variable frequency drives.
- Jib boom is fabricated from standard “S” beam with vertical angle truss to reduce deflection. Jib boom and truss bolt to back frame for ease of erection and assembly.
- A professional architect or engineer should approve any wall traveling jib application since forces exerted on a building structure are severe.

SPANCO manufacturers the most complete line of custom designed and standard jib cranes in the United States.

Multi-Industriel A.D. Ltd. info@multi-industriel.com
Toll-free : 1-800-363-4463 Tel : 514-875-6604 Fax : 514-875-6664

ARTICULATING JIB CRANES

ARTICULATING JIB CRANES
Free Standing

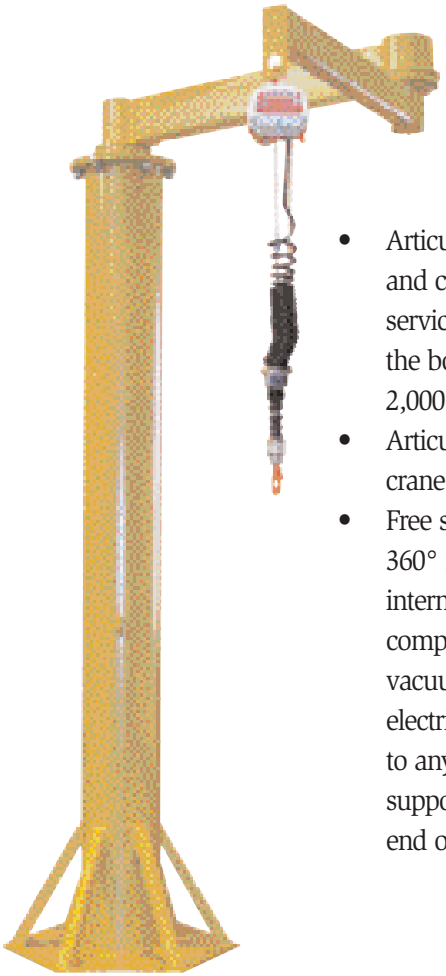

- Articulating jib cranes can move loads around corners and columns, reach into machinery and containers and service an area from close to the pivot point to the end of the boom for 360° of operation. Capacities from 150 to 2,000 lbs., spans to 16 ft.
- Articulating jibs can be floor, wall, ceiling, or bridge crane mounted to best suit your application.
- Free standing and ceiling mounted series offer 360° rotation with options to internally pipe compressed air, vacuum or electrification to any device supported on the end of the boom.

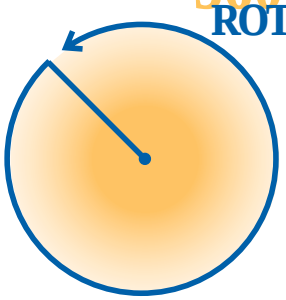

Bridge and Ceiling Mounted

- SPANCO's bridge mounted articulating jib design offers more headroom than those by other manufacturers.
- Bridge mounted jibs can support nearly any type of manipulator, balancer, or hoist.

Multi-Industriel A.D. Ltd.
Toll-free : 1-800-363-4463 Tel : 514-875-6604 Fax : 514-875-6664
info@multi-industriel.com

OPTIONS FOR JIB CRANES

Cost-effective Solutions For Lifting and Moving Heavy Material

RETROFIT DRIVE

- SPANCO's retrofit drive will fit all free standing jib cranes with a box style head assembly. Our modular style bolts to the back of the head assembly. High efficiency electric motor and worm gear reducer power large steel rollers with polyurethane treads, insuring good traction. Drive rollers are easily adjusted through spring tension insuring constant driving force.
- Standard unit is single speed with mainline contactor, reversing contactor, control transformer and fusing with a NEMA 3R control panel.

Options include:

- Multi-speed control, special control enclosures, air drives and special protective coatings.

- Retrofit drive kits are a cost effective method to upgrade an existing freestanding jib crane or a lower cost alternative to power rotate a new jib crane.

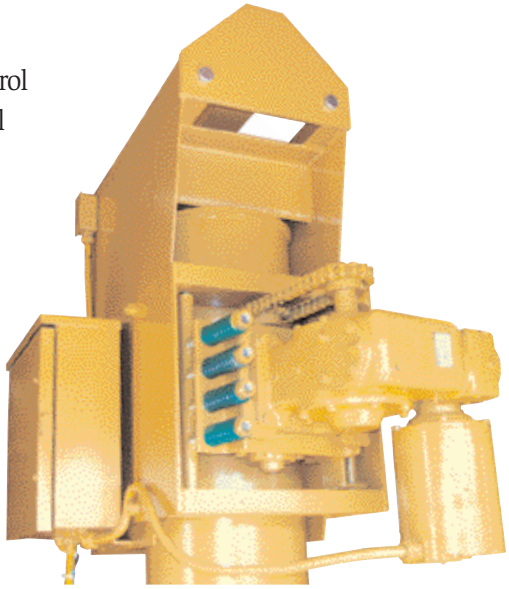

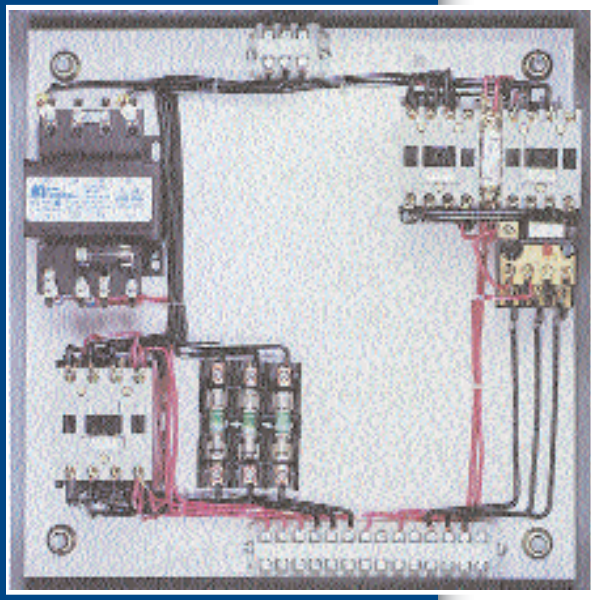

CONTROL PANEL

- SPANCO Standard Single Speed Control Panel - Includes mainline contactor, reversing magnetic contactors, thermal overload, 110V fused control transformer, branch circuit fusing to crane motor and solid state adjustable "soft start" control adjustable for time and torque in a NEMA 3R enclosure.
- SPANCO offers a variable frequency drive option, which eliminates the need for reversing contactors, and allows for multi-speed operation of jib cranes. Variable frequency drive provides infinitely variable speed options for maximum control and load positioning from micro speed to full speed, both in acceleration and deceleration phases.
- Optional control panels meet requirements for NEMA 12 and 4 environments for outdoor and indoor use.
- Explosion-proof enclosures and wiring are available for hazardous environments.

Multi-Industriel A.D. Ltd. info@multi-industriel.com
Toll-free : 1-800-363-4463 Tel : 514-875-6604 Fax : 514-875-6664

MOTORIZED JIBS AND DRIVE SYSTEMS

- SPANCO motorized jibs are custom designed to fit your requirements.
- Standard drive package is of chain and sprocket design, which provides positive traction, eliminating the slippage common to tractor-type drives or drives which power the roller assemblies and increases durability of the drive unit by not driving on load-bearing roller assemblies. Includes field-adjustable torque limiter for drive protection, worm gear reducer in oil bath lubrication for long lasting reliable operation and low maintenance. TEFC 30 minute rated motors are standard with thermal overload protection. Direct chain and sprocket drive allows for accurate and easy positioning of loads.
- Wall cantilever, wall bracket and mast type design utilize the same basic drive as the freestanding jib crane, guaranteeing high performance and reliability.

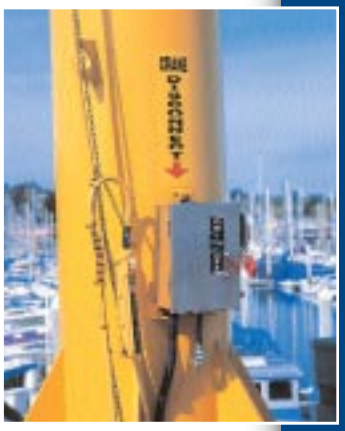

Options include:

- Stainless steel wear rings for corrosive or spark resistant applications, air drives for spark resistant applications, gear and pinion drive components for accurate positioning or high duty cycles, special control enclosures and wiring for hazardous locations, multi-speed units for delicate handling situations, and protective coatings: galvanizing, epoxy, Steelit, etc. just to name a few.
- All SPANCO motorized jibs are designed, with the customer in mind, for ease of maintenance. All drive parts are easily accessible for lubrication and adjustment.

As a leading manufacturer of motorized jib cranes in the U.S., SPANCO can design a crane to solve your most problematic material handling need.

LIFTING SOLUTIONS

JIB CRANES

Cost-effective Solutions For Lifting and Moving Heavy Material

We have the solution for all your material handling needs.

Stand Alone Workstation Bridge Cranes

Gantry Cranes

Ceiling Mounted Work Station Bridge Cranes

Aluminum Work Station Bridge Cranes

Work Station Jib Cranes

Fall Arrest Track

To request the featured literature., contact your authorized SPANCO distributor or call SPANCO at the numbers listed below.

SPANCO INC.®
Stellar Performance

Morgantown Business Park

604 Hemlock Road

Morgantown, PA 19543 U.S.A.

Tel: (610) 286-7200 Fax: (610) 286-0085

800-869-2080 Canada & U.S.A.

95-800-270-1080 Mexico

Visit SPANCO's Web site: www.spanco.com

CMAA CRANE MANUFACTURERS ASSOCIATION OF AMERICA, INC. MEMBER COMPANY

MATERIAL HANDLING INDUSTRY OF AMERICA® MEMBER COMPANY

TÜV

Multi-Industriel A.D. Ltd. info@multi-industriel.com
Toll-free : 1-800-363-4463 Tel : 514-875-6604 Fax : 514-875-6664